Robotics and Its Application AI352

Unit 4: Robot Control

Topics Cover: Control System Fundamental: Feedback Control, PID Control, Robot Arm Control, Joint Space Control and Operational Space Control, Mobile Robot Control, Path Following, Trajectory tracking, Adaptive Control and Learning Control

By Dr. Aaishwarya Bajaj

Teaching Assistant DoAI, SVNIT,Surat

From Human Operators to Control Laws

Manual Control

Automatic Control

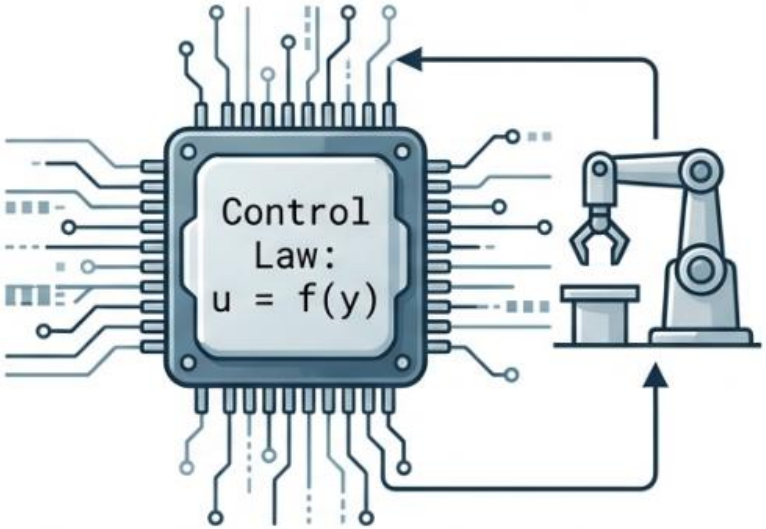

In modern robotics, the “Controller” is a mathematical algorithm executing on a microprocessor.

Robot Control

- Robot control is the process of commanding a robotic system to achieve a desired state, such as a specific position or motion, despite complexities like nonlinear dynamics and environmental uncertainties.
- The central objective is typically to reduce "servo errors"—the difference between the robot's desired behavior and its actual measured behavior. A standard control system consists of a reference value (the goal), a controller (the decision-maker), an actuator (the motor providing motion), and the plant (the robot itself)
- The actuations of the individual joints must be controlled in a coordinated fashion for the manipulator to perform a desired motion cycle. Microprocessor-based controllers are commonly used today in robotics as the control system hardware. The controller is organized in a hierarchical structure so that each joint has its own feedback control system, and a supervisory controller coordinates the combined actuations of the joints according to the sequence of the robot program. Different types of control are required for different applications. Robot controllers can be classified into four categories

- Limited Sequence Control - pick-and-place operations using mechanical stops to set positions.
- Playback with point to point control – records work cycle as a sequence of points, then plays back the sequence during program execution.
- Playback with continuous path control – greater memory capacity and/ or interpolation capability to execute paths (in addition to points).
- Intelligent control - exhibits behavior that makes it seem intelligent, e.g., responds to sensor inputs, makes decisions, communicates with humans.

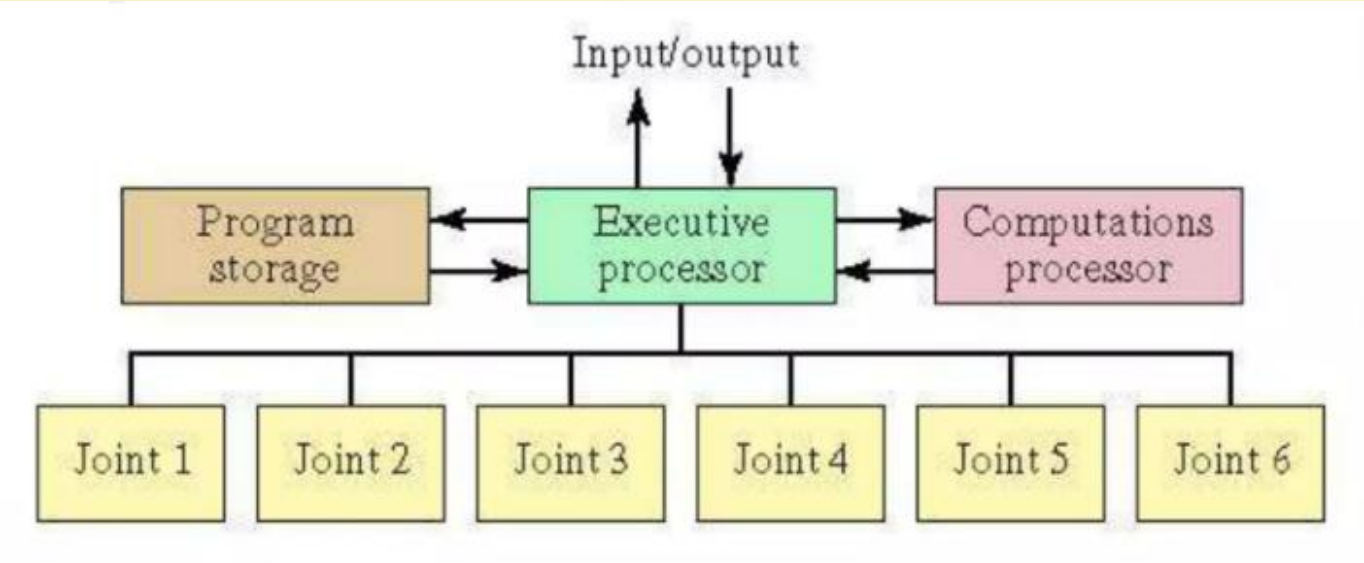

Open Control System

These control systems do not use the feedback from the robot's environment to adjust their tasks. Instead, they rely on pre-defined commands and assume that the surroundings are predictable, meaning they are less accurate.

However, the systems are simple and inexpensive. Some examples of open-loop control systems include conveyor belts and automated sprinklers. An automated sprinkler, for instance, follows a predetermined water distribution schedule, assuming that the garden or law has a uniform shape.

Advantages

- They are cheap and easy to install.
- They are suitable for repetitive and predictable environments.

Disadvantages

- These systems are less adjustable to the changing conditions.
- They can be inaccurate at times due to the lack of feedback

Reactive Control System

This type responds directly to the sensory inputs, making those best for some tasks that need quick reflexes, thus adjusting to real-time changes.

The systems don't have integral models but can still achieve complex behavior by reacting to stimuli. Some reactive control robots are inspect-inspired robots that respond to sudden changes in a complex environment, such as falling items. Ex: Roomba (Vacuum Robot)

Benefits

- They offer fast response times.
- These robots are adaptable to unpredictable environmental issues.

Disadvantages

- It is limited to decision-making capabilities.
- It is not suitable for long-term planning.

The Necessity of Feedback: A Simple Thought Experiment

Open Loop: Ignorant of Output

Closed Loop: Measuring & Adjusting

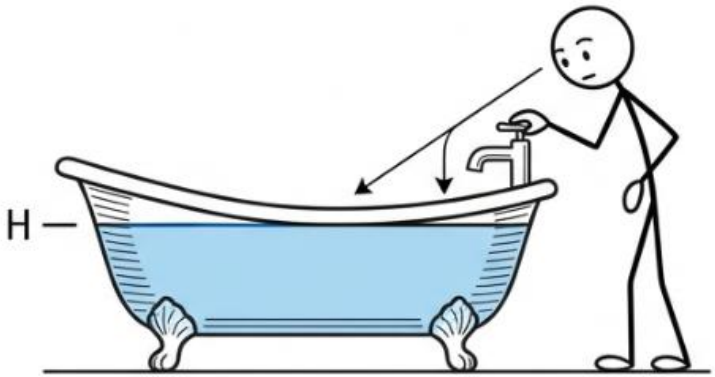

$$u(t) = K(H - h(t))$$

$u(t)$ = Inflow $\quad$ $h(t)$ = Current Level

H = Desired Level $\quad$ K = Gain (Intensity)

Closed Control System

It incorporates the feedback mechanism to monitor the robot's performance and make all the adjustments. This gives a chance to have accurate and adaptive behavior crucial for stomach environments.

The sensors measure the robots' outputs and compare them to the desired output, thus generating an error signal. Some of the examples are self-driving tendencies. These use cameras and radar sensors to gather real-time data about their surroundings and paths.

Pros

- They are more accurate in providing relevant performance.
- The robot control systems can deal with complex tasks.
- They are easily adjustable to the changes in the environment.

Cons

- They are more complicated to design and implement.
- You will need additional sensors to operate these control systems smoothly.

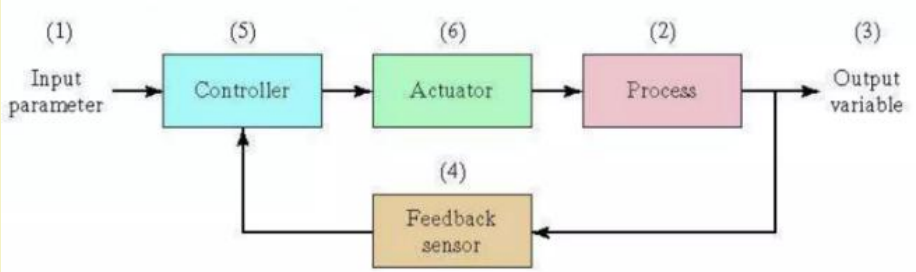

Deliberative Control System

It generates high-level actions and is best suited for complex decision-making and long-term planning tasks. Such systems have knowledge representation and optimization techniques that assist in achieving some goals.

Some examples of deliberate control include robotic surgeons used in preoperative planning as they offer real-time data, thus allowing surgeries to be performed effectively, and autonomous exploration robots.

Advantages

- They can help with complex planning.
- These control systems are ideal for long-term tests.
- They can easily handle uncertainties.

Disadvantages

- It is demanding.
- You will need accurate planning capabilities.

The Motion Control Process

For a manipulator to execute a task, the control system typically follows this hierarchy:

1. Input Specification: Initial and final end-effector locations are defined in Cartesian space.

2. Inverse Kinematics: The system computes the required end-effector locations in joint space.

3. Trajectory Generation: A generator determines the necessary joint-position time histories.

4. Actuation: Based on calculated servo errors (the difference between desired and actual position/velocity), the controller commands the actuators to apply the required torque to achieve motion

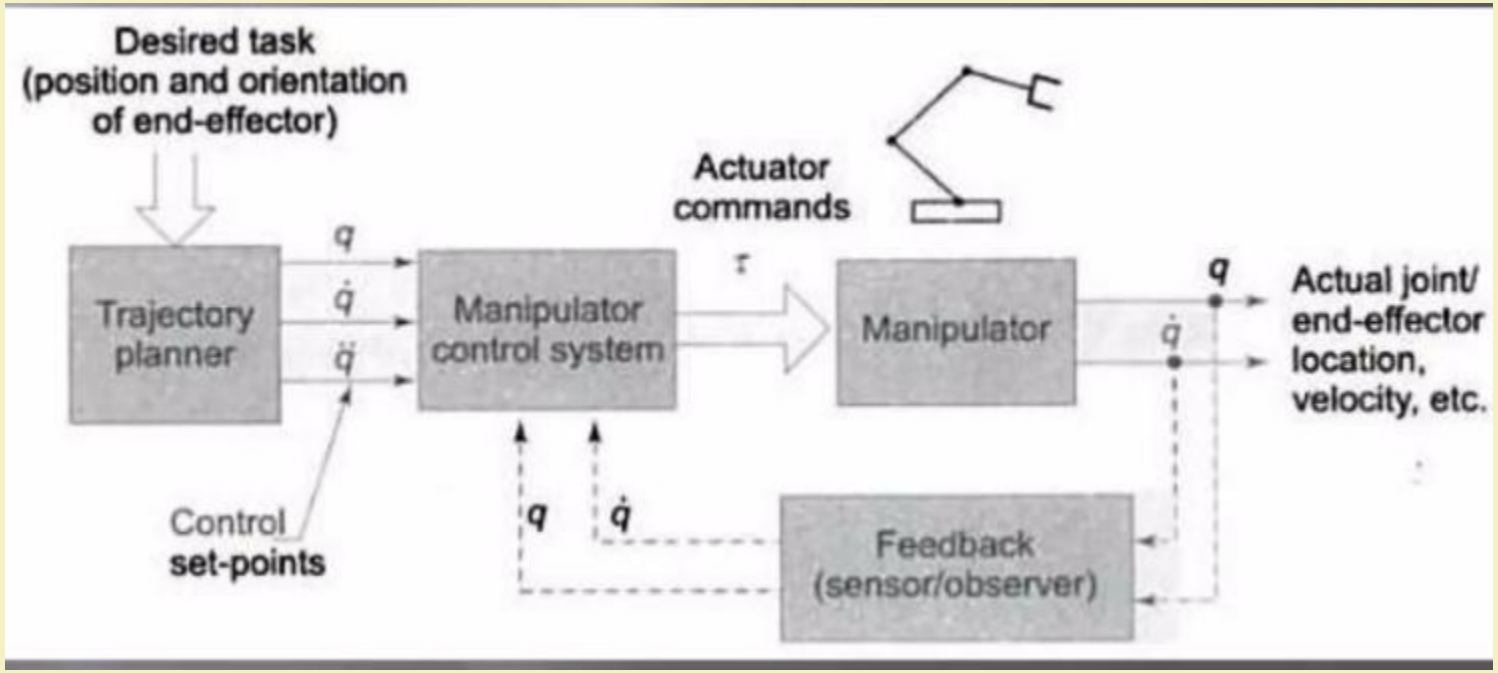
Desired task
(position and orientation
of end-effector)
Trajectory
planner
q
q̇
q̈
Manipulator
control system
Actuator
commands
τ
Manipulator
q
q̇
Actual joint/
end-effector
location,
velocity, etc.
Control
set-points
q
q̇
Feedback
(sensor/observer)

Control of Motor

- A DC motor is connected at each joint of a robot, where torque is proportional of the armature current.

$$\tau_m \propto I_A$$

$$\tau = K_m \cdot I_A$$

- Joint torque τ can be represented as follows:

$$\tau = D(\theta)\ddot{\theta} + h(\theta, \dot{\theta}) + C(\theta)$$

where
$D(\theta)$: inertia terms
$h(\theta, \dot{\theta})$: Coriolis and centrifugal terms
$C(\theta)$: gravity terms

If we consider friction, then

$$\boldsymbol{\tau} = \boldsymbol{D}(\boldsymbol{\theta})\ddot{\boldsymbol{\theta}} + \boldsymbol{h}(\boldsymbol{\theta}, \dot{\boldsymbol{\theta}}) + \boldsymbol{C}(\boldsymbol{\theta}) + \boldsymbol{F}(\boldsymbol{\theta}, \dot{\boldsymbol{\theta}})$$

where
$F(\theta, \dot{\theta})$: friction terms

Let us consider Partitioned Control Scheme

$$\boldsymbol{\tau} = \boldsymbol{\alpha}\boldsymbol{\tau}' + \boldsymbol{\beta}$$

where $\boldsymbol{\alpha} = \boldsymbol{D}(\boldsymbol{\theta})$

$$\boldsymbol{\beta} = \boldsymbol{h}(\boldsymbol{\theta}, \dot{\boldsymbol{\theta}}) + \boldsymbol{C}(\boldsymbol{\theta}) + \boldsymbol{F}(\boldsymbol{\theta}, \dot{\boldsymbol{\theta}})$$

Now, τ' can be written as follows:

$$\tau' = \ddot{\theta}_d + K_P E + K_D \dot{E} \quad \text{(for PD control law)}$$

$$\tau' = \ddot{\theta}_d + K_P E + K_I \int E dt + K_D \dot{E} \quad \text{(for PID control law)}$$

where E = error = $\theta_d - \theta$
where θ_d : Desired value of θ
θ : Actually obtained value of θ

Control Architecture

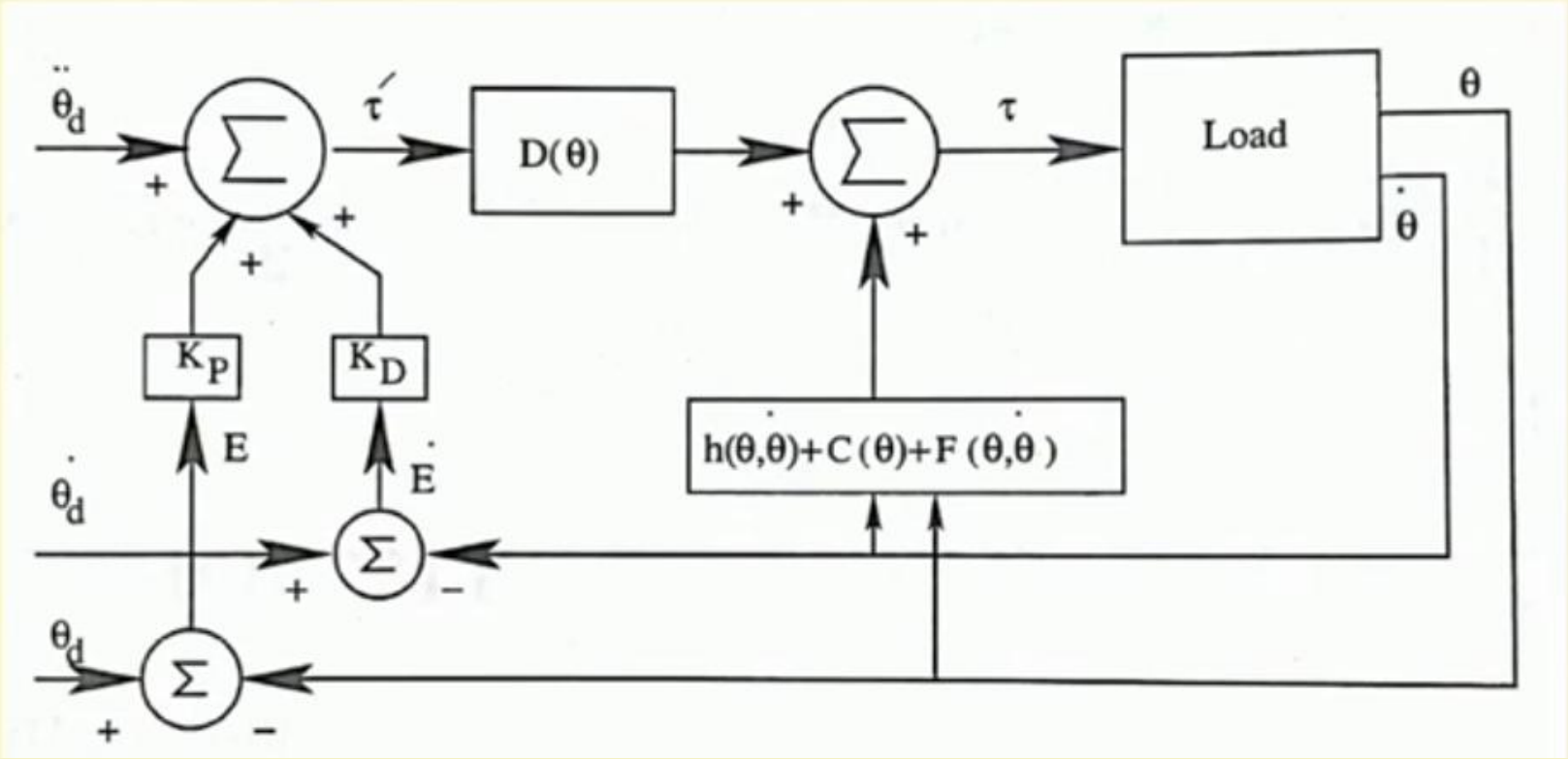

PUMA

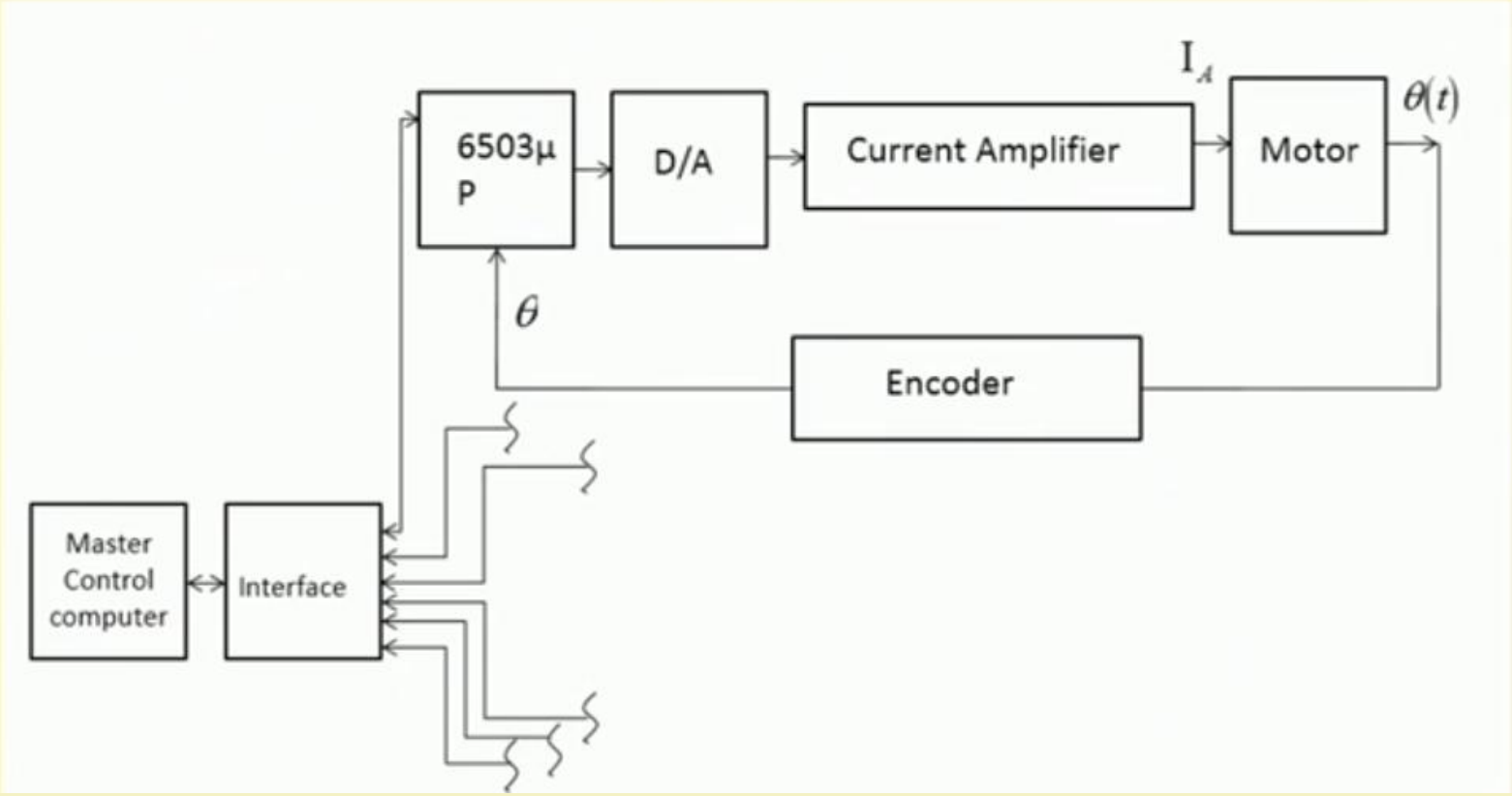
6503µ
P
D/A
Current Amplifier
I_A
Motor
$\theta(t)$
θ
Encoder
Master
Control
computer
Interface

PID Controller

A Proportional-Integral-Derivative (PID) controller is a widely used industrial feedback mechanism that maintains a process variable (e.g., temperature, speed) at a desired setpoint by calculating the error between them. It continuously adjusts output based on present error (P), accumulated past error (I), and predicted future error (D).

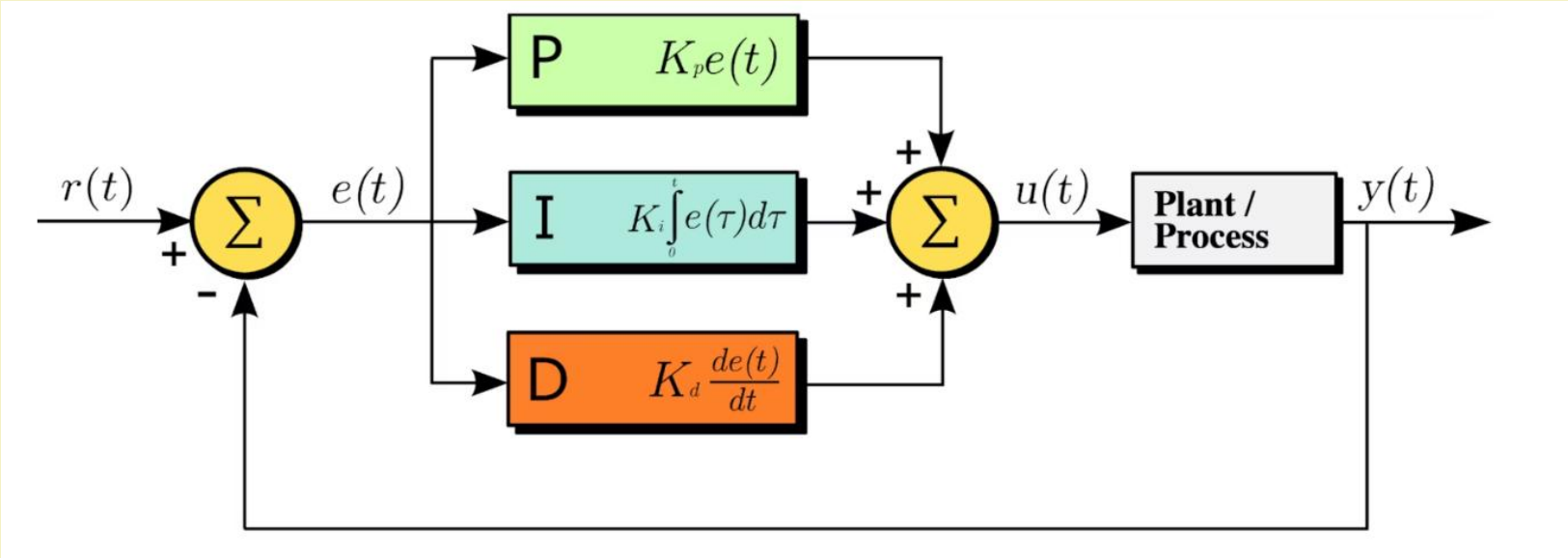

PID Controller

The Proportional (P) term responds to the present error, generating an output proportional to its magnitude. By applying immediate corrective action, the P term minimizes errors quickly.

The Integral (I) term addresses any persistent errors or long-term deviations from the setpoint by accumulating the error over time. By integrating the error signal, the I term ensures that the system approaches and maintains the setpoint accurately, eliminating steady-state errors.

The Derivative (D) term anticipates future changes in the error by evaluating its rate of change. This approach dampens oscillations and stabilizes the system, especially during transient responses.

Evolution of the Controller: P vs. PI

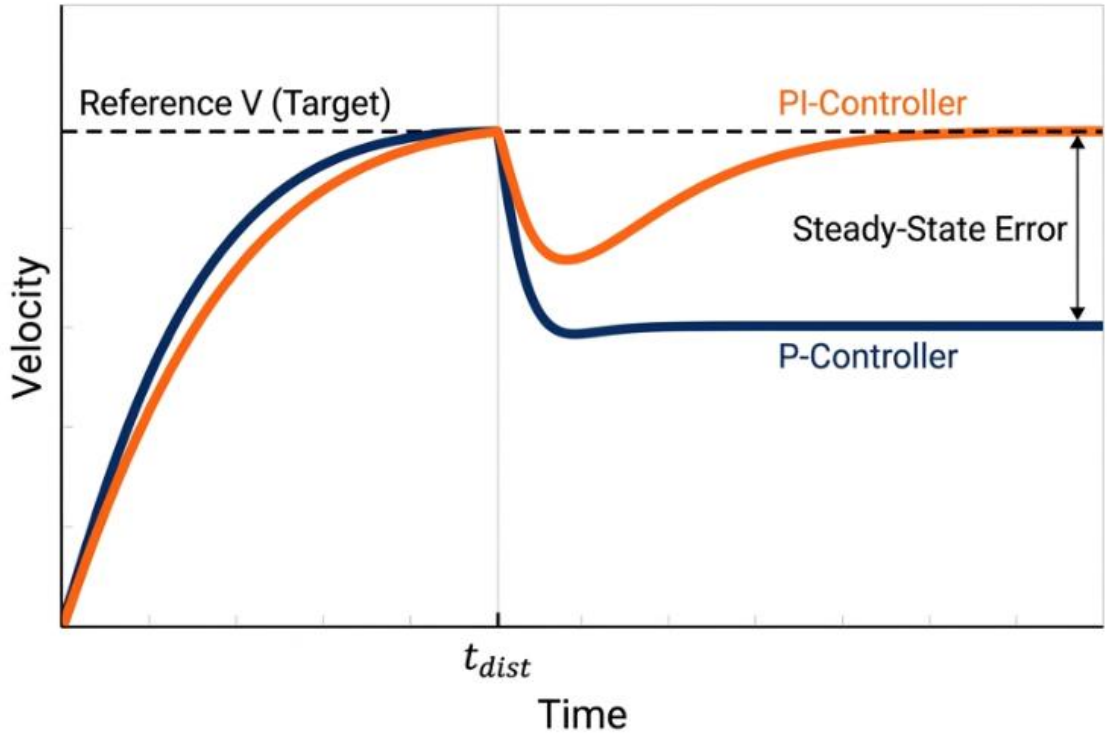

Proportional (P): Fail.

$u(t) = K_p * e(t)$

Proportional-Integral (PI): Success.

$u(t) = K_p * e(t) + K_i * \int e(\tau)d\tau$

PD vs PID Controller

Feature	PD Controller	PID Controller
Steady-State Error	May result in a small remaining error, especially in the presence of gravity or constant disturbances.	**Eliminates steady-state error** by integrating the error until it reaches zero.
Overshoot	Helps reduce overshoot due to the damping effect of the Derivative term.	Increasing the Integral gain (**Ki**) often **increases overshoot** because accumulated errors must be "integrated away".
Stability	Generally provides good closed-loop properties for simple systems like a double integrator.	**Provide balance between speed, accuracy and stability.**
Complexity	Simpler to tune as there are only two gains (**Kp**, **Kd**).	More complex to tune; the terms are intertwined, and a trade-off is required between speed and precision.
Application	Commonly used for point-to-point regulation where the goal is to bring a joint to a fixed position	Widely adopted in industrial robots because of its simplicity and effectiveness in handling model uncertainties

Robot Arm Control

- Robot arm control involves managing the motion of robotic rigid manipulators to achieve specific tasks, primarily by reducing the difference between the desired and actual state, known as servo error. Control can be specified in two primary domains:
- Joint space Control
- Operational (task) space Control

Joint Space Control

- The goal of joint space control is to design a feedback controller so that the joint coordinates q(t) track a desired motion q_d(t) as closely as possible.
- Workflow: Even though a task is usually specified in end-effector coordinates (x_d), this strategy first converts the desired motion into a corresponding joint trajectory using inverse kinematics. The controller then determines the necessary joint torque based on measurements of the current joint states.
- Suitability: It is highly effective for situations where tasks can be accurately preplanned and require little to no online adjustment of the trajectory.
- Techniques: Common schemes include simple PD and PID control, as well as model-based techniques like inverse dynamics control.
- Limitations: Joint space control does not directly influence operational space variables. Factors like backlash, coupling, and elasticity can cause a loss of accuracy at the end-effector

Operational Space Control

- Operational space control directly tracks the motion of the end-effector (x) in its environment.
- Workflow: The controller employs a feedback loop that directly minimizes task errors. It embeds velocity-level forward kinematics (using the Jacobian matrix) into the control algorithm, meaning explicit inverse kinematics need not be calculated.
- Suitability: This approach is essential for complicated or uncertain environments where the end-effector must respond to sensor inputs or when managing the interaction between the manipulator and its environment is critical.
- Dynamics: The motion is expressed through operational space dynamics, which include a pseudo-inertia matrix $\Lambda(q)$, Coriolis/centrifugal forces $\Gamma(q, \dot{q})$, and gravity forces $\eta(q)$
- Singularities: A key challenge is that the pseudo-inertia matrix $\Lambda(q)$ becomes very large as the robot approaches singular configurations, requiring large forces to move the arm in certain directions

Joint Space Vs Operational Space

Feature	Joint Space Control	Operational Space Control
Control Goal	Tracking desired joint motion $qd(t)$.	Tracking desired end-effector motion $xd(t)$.
Inverse Kinematics	Required explicitly to convert task to joint space.	Not required explicitly; kinematics are embedded in the loop.
Environment Interaction	Less suitable for online adjustments.	Essential for environmental interaction tasks.
Accuracy	Can lose end-point accuracy due to unmodeled structural factors.	Directly minimizes task/end-point errors.
Dynamic Complexity	Deals with coupled joint dynamics.	Deals with task space dynamics and singular configurations

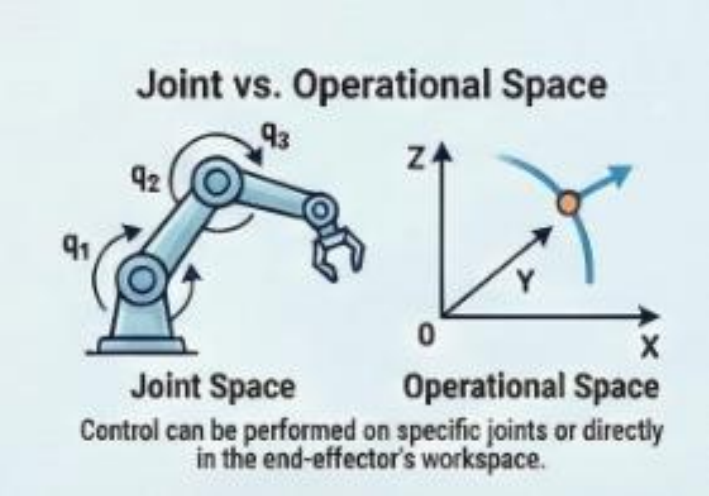

Linear Control of Manipulators

- The initial and the final location of end-effector in Cartesian space, specified by the transformation matrices T_{initial} and T_{final} , serve as the input.
- The inverse kinematics model computes the desired end-effector location in joint space.
- Then, a trajectory generator computes the joint-position time histories, based on the joint-space algorithms.
- Depending on the servo error computed from the base reference values and the sensor measurements, the control system commands the individual actuators to achieve the desired motion.

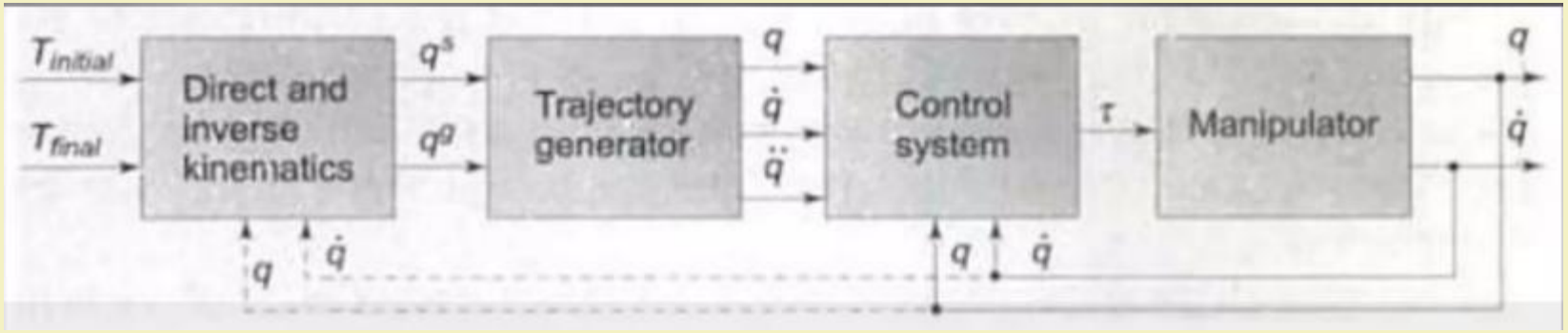

- The use of linear-control techniques is valid only when the system being studied can be modeled mathematically by linear differential equations.
- We have to calculate joint position time histories that correspond to desired end-effector motions through space.
- For the case of manipulator control, such linear methods must be viewed as approximate methods, for the dynamics of a manipulator are more properly represented by a nonlinear differential equation.
- It is often reasonable to make such approximations methods are most often used in current industrial practice.
- The justification for using linear controllers is not only empirical.
- There is a certain linear controller leads to a reasonable control system even without resorting to a linear approximation of manipulator dynamics.

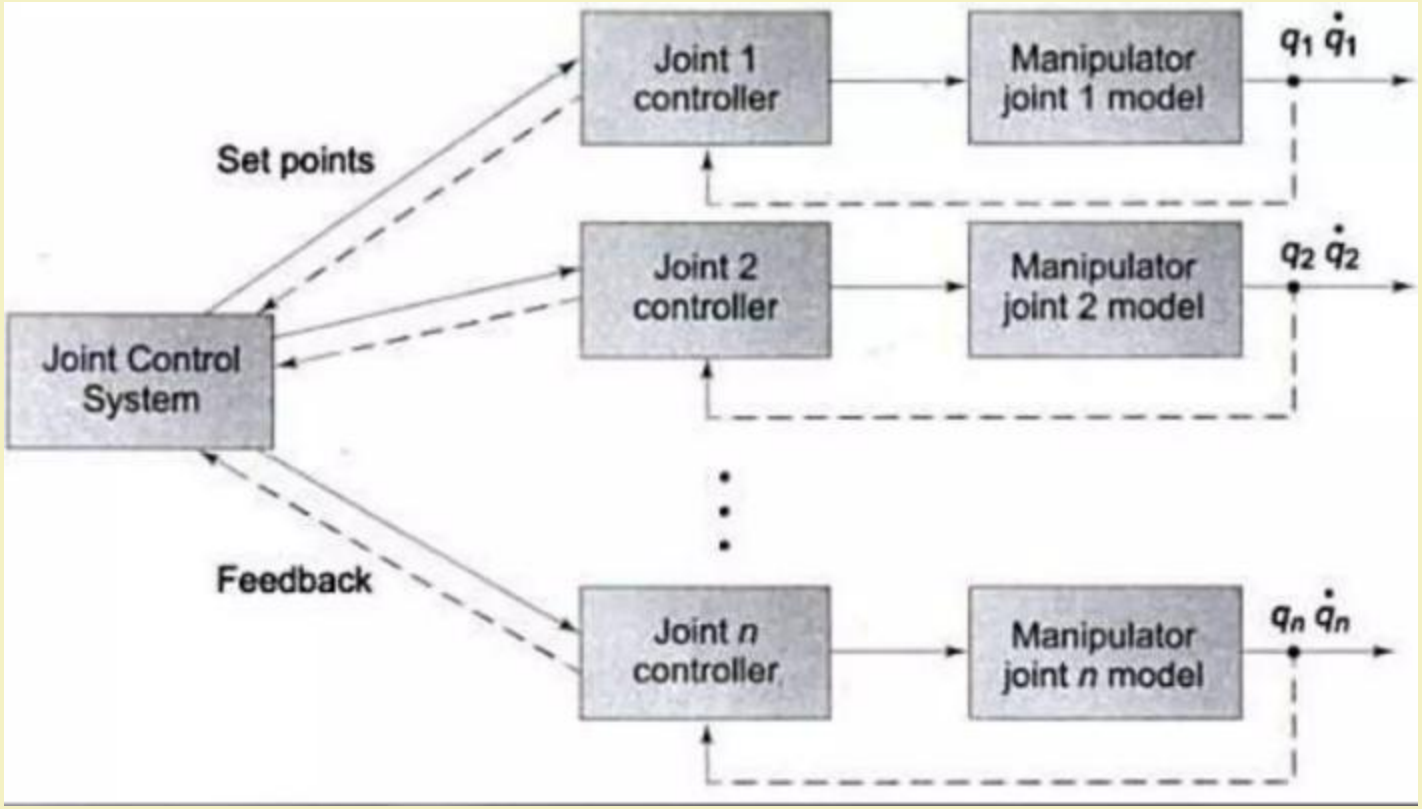

Robot Control Architecture of n-DOF Manipulator

- The manipulator control problem is a multi-input, multi-output (MIMO)problem, involving joint and the end-effector locations, velocities, accelerations, and force vectors.
- To simplify the problem, each joint is considered to be independent and separately controlled.
- This single-joint model is assumed to have a single input(set point) and single output(location, velocity, etc).
- Hence, the n-DOF manipulator is modelled as n-independent linear second-order system and is controlled by n-independent single-input, single-output (SISO)control systems.

Non-Linear Control Manipulators

- To overcome unmodeled dynamics, variable payloads, fiction and disturbance torque, variation and noise, we use nonlinear control to :

✓ Tracking, regulate state, state set point

✓ Ensure the desired stability properties

✓ Ensure the appropriate transients

✓ Reduce the sensitivity to plant parameters

- A lot of techniques that are used for non linear systems come from linear systems, because:

❖ Nonlinear systems can (sometime) be approximated by linear systems.

❖ Nonlinear systems can (sometime) be "transformed "into linear systems.

❖ The tools are generalized and extended.

Handling Reality: Linearization

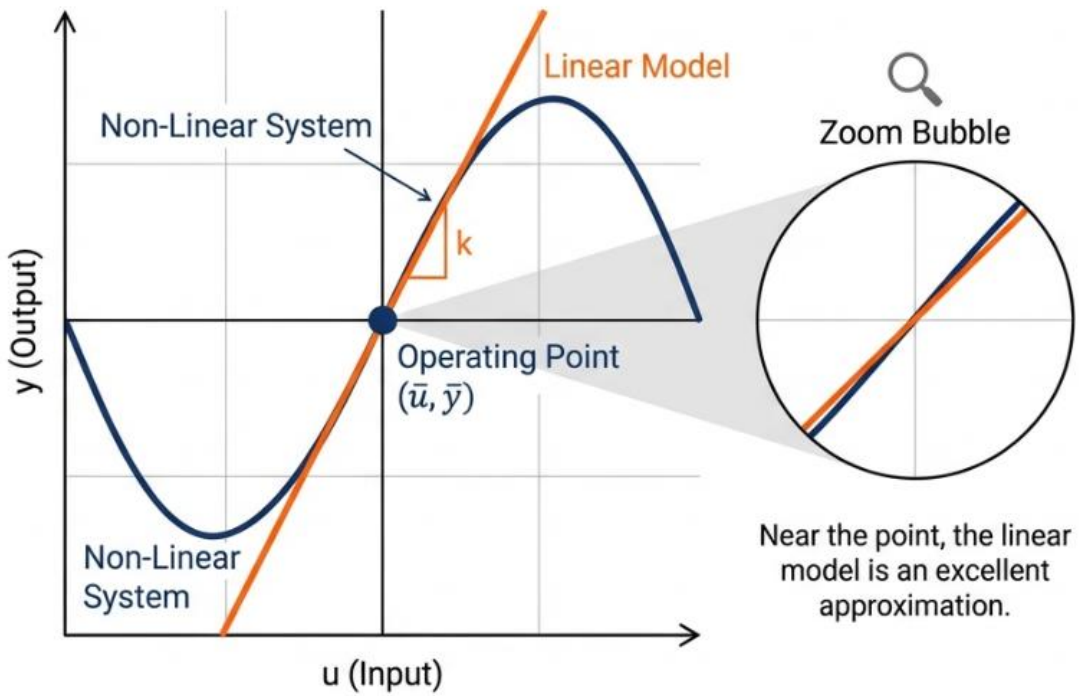

Real systems are non-linear. We use Taylor Series expansion to approximate them as linear straight lines around a specific working point.

$$y \approx \bar{y} + k(u - \bar{u})$$

Modelling and Controller Design

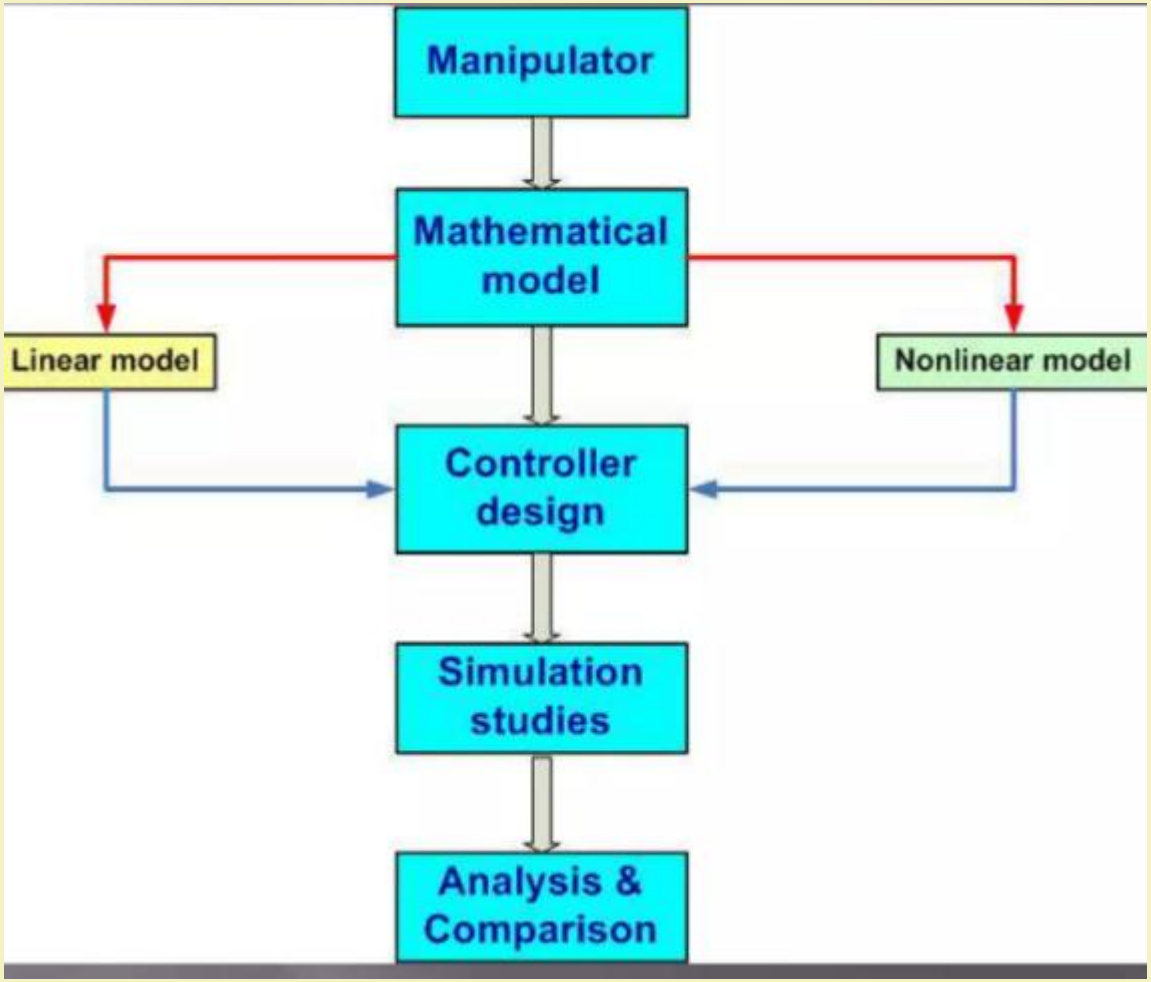

Mobile Robot Control

- Mobile robots are typically nonholonomic systems, meaning they have constraints on their allowable velocities (e.g., a wheeled robot cannot move sideways).
- Control is frequently solved using first-order kinematics, a common theoretical and practical simplification because system dynamics can often be neglected at lower speeds.
- A standard architecture for mobile robot motion control involves two PID controllers: one to control velocity and another to control azimuth (heading). This approach separates the control of linear velocity and angular velocity to manage the robot's movement in a two dimensional plane.

Trajectory Tracking

- Objective: The robot must follow a time-varying reference trajectory (q_d(t) or x_d(t)), meaning it must be at a specific position at a specific time.
- Requirements: The controller must account for desired position, velocity, and acceleration simultaneously.
- Implementation: This is a fundamental task where PID gains are often tuned using stochastic algorithms like Particle Swarm Optimization (PSO) to minimize distance and deviation errors

Path Following

- Objective: The robot follows a geometric path (often composed of straight-line segments) by minimizing the cross-track error (y_e), which is the orthogonal distance between the robot and the path.
- Line-of-Sight (LOS) Guidance: A primary strategy where the robot's heading is directed toward a point at a specific look-ahead distance (Δ) on the path tangent.
- Input Constraints: In differential drive robots, wheel velocity limits couple speed and yaw rate. High speeds reduce the "control authority" for turning, which can lead to overshoot in sharp turns. Advanced schemes attenuate speed in favor of yaw rate when large heading errors or path curvatures are detected

Adaptive Control

- Adaptive control is designed to handle parametric (structured) uncertainty, such as imprecise knowledge of a robot's mass, moments of inertia, or changing payloads.
- Mechanism: Unlike standard controllers, adaptive controllers have time-varying parameters and a mechanism that adjusts them online based on signals from the closed-loop system.
- Key Schemes:

❖ Adaptive Computed-Torque: Updates the estimates of the robot's dynamic model in real-time.

❖ Adaptive Inertia-Related Control: Removes the need to measure joint acceleration, which is often noisy and difficult to obtain.

❖ Adaptive Robust Control (ARC): This advanced approach combines parameter adaptation with deterministic robust control. It emphasizes guaranteed transient performance and tracking accuracy even when the system faces uncertain nonlinearities like friction and external disturbances

Learning Control

- Learning control (or repetitive control) is used for robots performing repetitive tasks, such as pick-and-place or painting, where data from previous cycles can improve future performance.
- Pure P-Type Learning: A recursive law where the correction for the input torque in the next cycle is proportional to the error recorded in the current cycle.
- Forgetting Factor: Introduced to enhance robustness, this factor prevents the accumulation of errors caused by measurement noise or nonrepeatable fluctuations in dynamics.
- Deep Reinforcement Learning (DRL): A modern, data-driven approach to intelligent control. Instead of hand-coding directions, a deep policy neural network learns the optimal sequence of commands through interactions (rewards/punishments) with the environment. This is particularly useful for coordinating joints in unstructured environments where traditional models may fail.

SLAC: Simulation-Pretrained Latent Action Space

- Definition: A framework designed to enable sample-efficient and safe real-world Reinforcement Learning (RL) for robots, particularly high-DoF (degrees of freedom) systems like mobile manipulators.
- Key Idea: It pre-trains a "latent action space" in simulation to define complex, safe skills. This learned space is then used for real-world training, reducing the need for high-fidelity simulations and preventing dangerous behaviors.
- Advantages:

❖Safety: Learns skills that avoid dangerous behaviors.

❖Efficiency: Enables fast learning of complex, whole-body tasks.

❖Sim-to-Real: Bridges the gap between simulation and the real world.

- Application: Whole-body mobile manipulation and tasks requiring safe exploration.

DCAL: Desired Compensation Adaptation Law

- Definition: A specific type of adaptive control law designed to improve the trajectory tracking performance of robot manipulators.
- Key Idea: Instead of using actual state measurements in the regressor (which can be noisy), it uses the desired trajectory (position, velocity, acceleration) in the adaptation law.
- Advantages:

❖ Superior tracking performance among traditional adaptive schemes.

❖ Reduces the effects of noise by using desired rather than actual trajectory data.

- Application: Trajectory tracking control for robot manipulators.

DCARC: Desired Compensation Adaptive Robust Control

- Definition: An extension of ARC (Adaptive Robust Control) that combines adaptation (for parameter estimation) and robust control (for handling uncertainties).
- Key Idea: It uses the "desired compensation" philosophy (similar to DCAL) within a robust control framework to achieve both high precision and stability.
- Advantages:

❖ Guarantees superior performance in both transient tracking errors and final accuracy.

❖ Handles both parametric uncertainties (e.g., mass) and nonlinear, unstructured uncertainties (e.g., friction).

- Application: Control of mechanical systems with complex dynamics and uncertain operating environments.

The Evolution of Robot Motion Control: From PID to Adaptive Robust Schemes

HIERARCHY OF CONTROL STRATEGIES

Adaptive Robust Control (ARC)

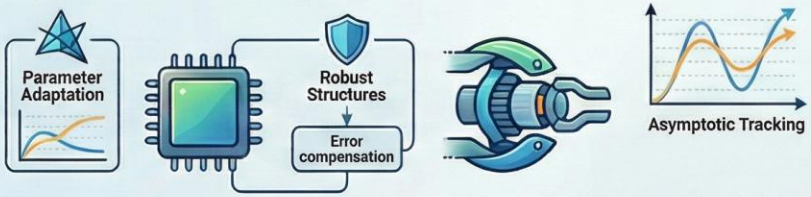

Computed-Torque Control

Uses feedback linearization to convert non linear robot dynamics into decoupled linear systems.

PID: The Industrial Standard

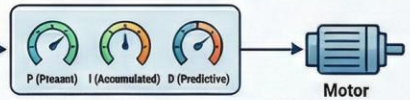

Valued for simplicity, PID provides present (P), accumulated (I), and predictive (D) effort.

Experimental Tracking Performance (Max Error vs. Final Error)

Purpose: Comparing experimental tracking performance (Max Error vs. Final Error) across different control schemes.

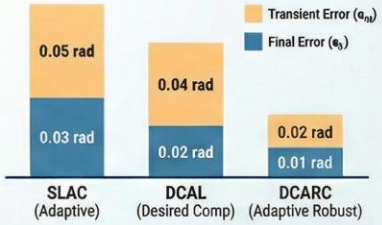

FOUNDATIONAL CONTROL FRAMEWORKS

Regulation vs. Trajectory Tracking

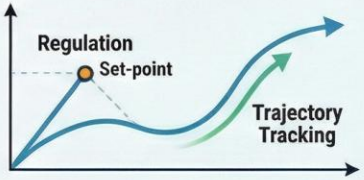

Regulation focuses on point-to-point set-points, while tracking requires following time-varying reference paths accurately.

The Dynamic Lagrange Model

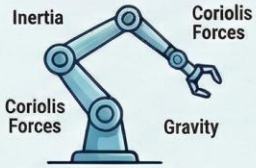

Rigid manipulators are governed by equations account for martia, Coriolis forces, and gravity.

Joint vs. Operational Space

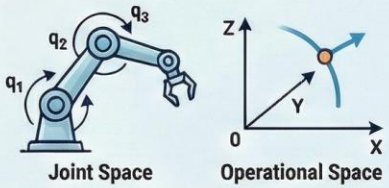

Control can be performed on specific joints or directly in the end-effector's workspace.